# APPENDIX B: ILLUSTRATIONS

The illustrations shown in this Appendix are included to provide readers with a general knowledge of what the various types of scaffolds and other equipment might look like and are not to be relied upon in determining the safety requirements or safe use of the equipment for any particular installation situation.

They are not intended to represent any specific product, design, or installation.

**TITLE** **PAGE**


Platform Unit Types .....
Scaffolding Work Surfaces .....
Outrigger Scaffold .....
Fabricated Tubular Frame Manually Propelled Mobile Scaffold .....
Prefabricated Mobile Tower Unit .....
Wood Pole Scaffold .....
Frame Scaffold Access .....
System Scaffold .....
Tube and Coupler Scaffold .....
Two-Point Suspended Scaffold .....
Two-Point Suspended Scaffold Ground Rigged Sway Control Illustration .....
Multi-Level Suspended Scaffold with Powered Hoists .....
Multi-Point Suspended Scaffold .....
Suspended Platform Welding Precautions .....
Stone Setters' Adjustable Multi-Point Suspended Scaffold with Manual Winding Drum Hoists .....
Work Cages .....
Masons' Adjustable Multi-Point Suspension Scaffold with Winding Drum Hoists .....
Boatswain's Chair .....
Interior Hung Scaffold .....
Catenary Scaffold .....
Needle Beam Scaffold .....
Float Scaffold .....
Window Jack Scaffold .....
Metal Carpenter Bracket .....
Pump Jack Scaffold .....
Adjustable Scaffolds .....
Horse Scaffold .....
Bricklayers' Square Scaffold .....
Ladder Jack Scaffold .....
Extension Trestle Ladder Supported Scaffold .....
Free Standing Ladder Supported Scaffold .....
Typical Examples of Vehicle-Mounted Elevating and Rotating Aerial Devices Covered in ANSI/SIA A92.2 Standard .....
Typical Examples of Manually Propelled Elevating Aerial Platforms Covered in ANSI/SIA A92.3 Standard .....
Typical Examples of Boom-Supported Elevating Work Platforms Covered in ANSI/SIA A92.5 Standard .....
Typical Examples of Self-Propelled Elevating Work Platforms Covered in ANSI/SIA A92.6 Standard .....
Typical Examples of Airline Ground Support Vehicle-Mounted Vertical Lift Devices Covered in ANSI/SIA A92.7 Standard .....
Typical Example of Articulated Boom for Vehicle-Mounted Bridge Inspection and Maintenance Devices Covered in ANSI/SIA A92.8 Standard .....
Typical Examples of Tower-Type Construction for Vehicle-Mounted Bridge Inspection and Maintenance Devices Covered in ANSI/SIA A92.8 Standard .....
Typical Examples of Mast-Climbing Work Platforms Covered in ANSI/SIA A92.9 Standard .....

**Platform Unit Types**

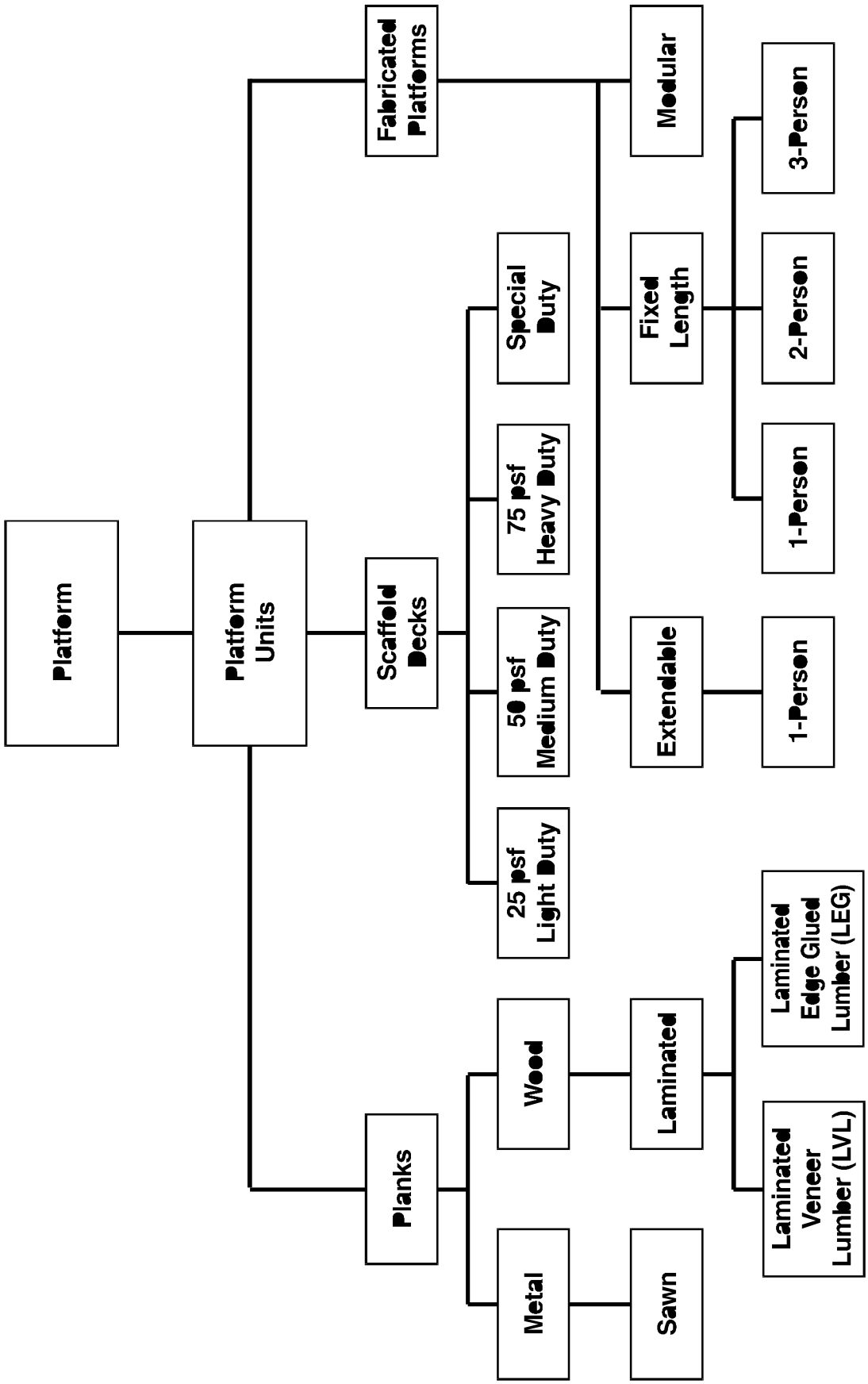

## Scaffolding Work Surfaces

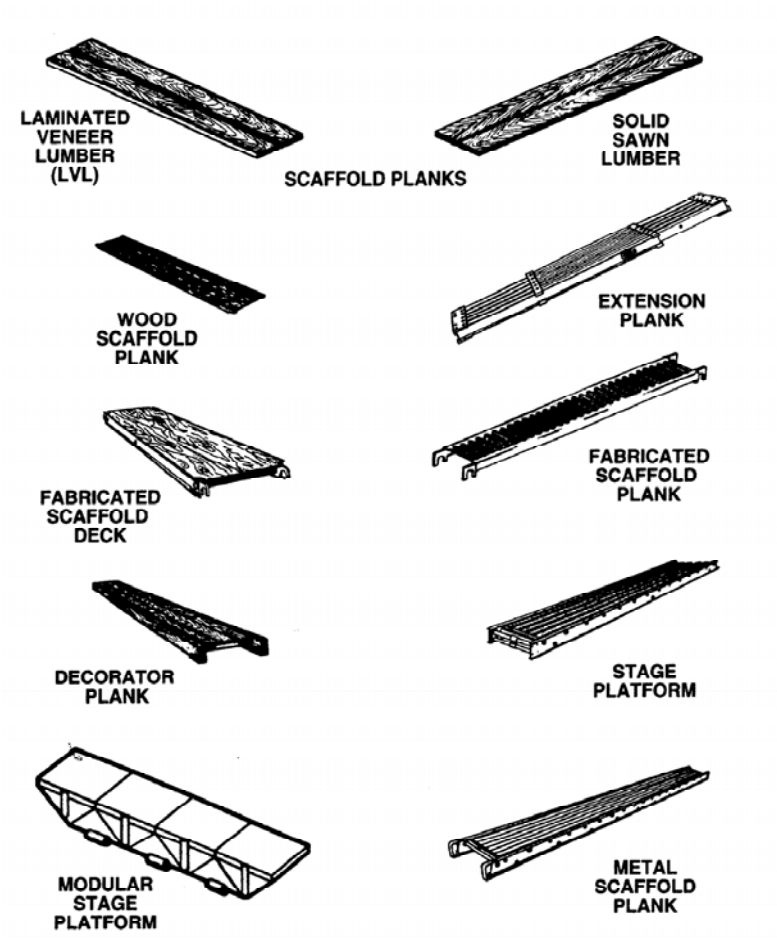


## Outrigger Scaffold

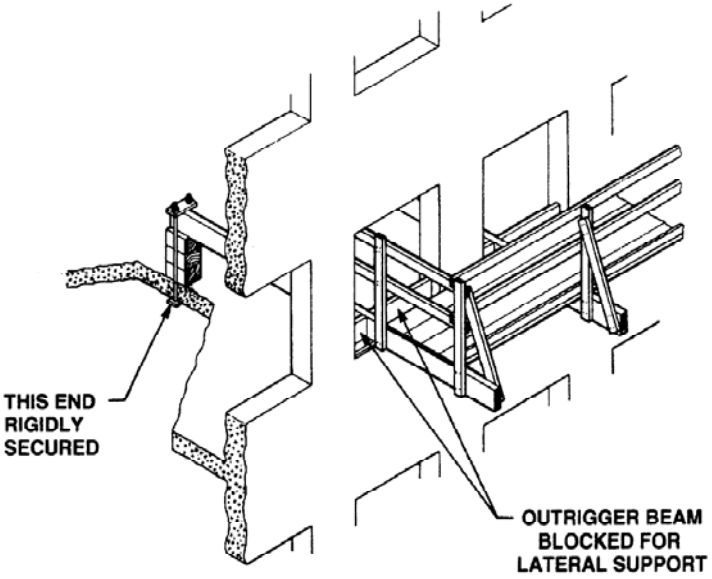

## Fabricated Tubular Frame Manually Propelled Mobile Scaffold

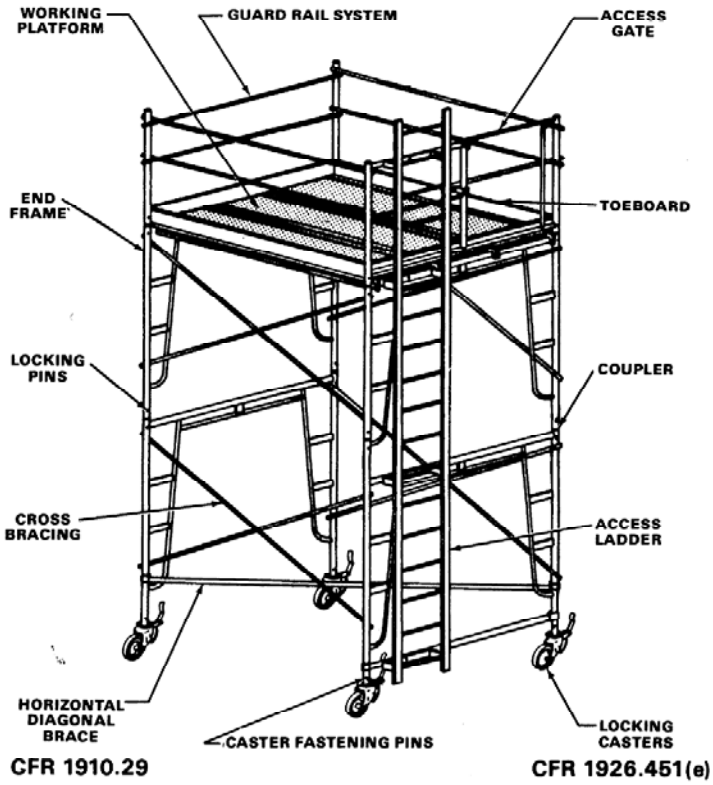


## Prefabricated Mobile Tower Unit

THIS SCAFFOLD IS NORMALLY MANUFACTURED AS COMPLETE UNITS/TOWERS FOR USE AS MANUALLY PROPELLED MOBILE SCAFFOLD WITH SUPPLIERS IDENTIFICATION SYMBOL

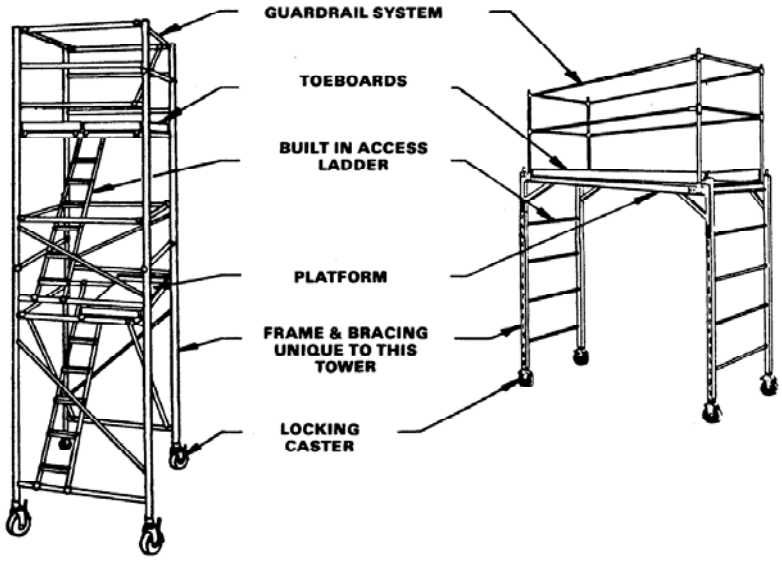

## Wood Pole Scaffold

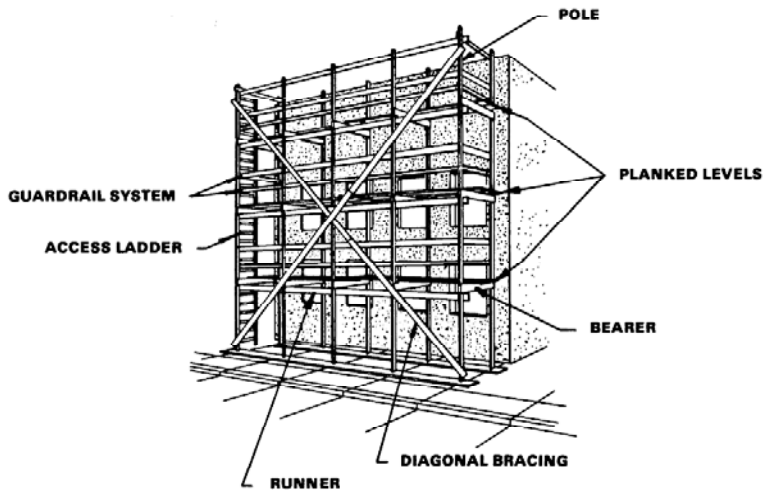


**SEE TABLES IN OSHA STANDARDS FOR SIZE & SPACING OF MEMBERS**

**CFR 1910.28(b)** **1926.451(b)**

## Frame Scaffold Access

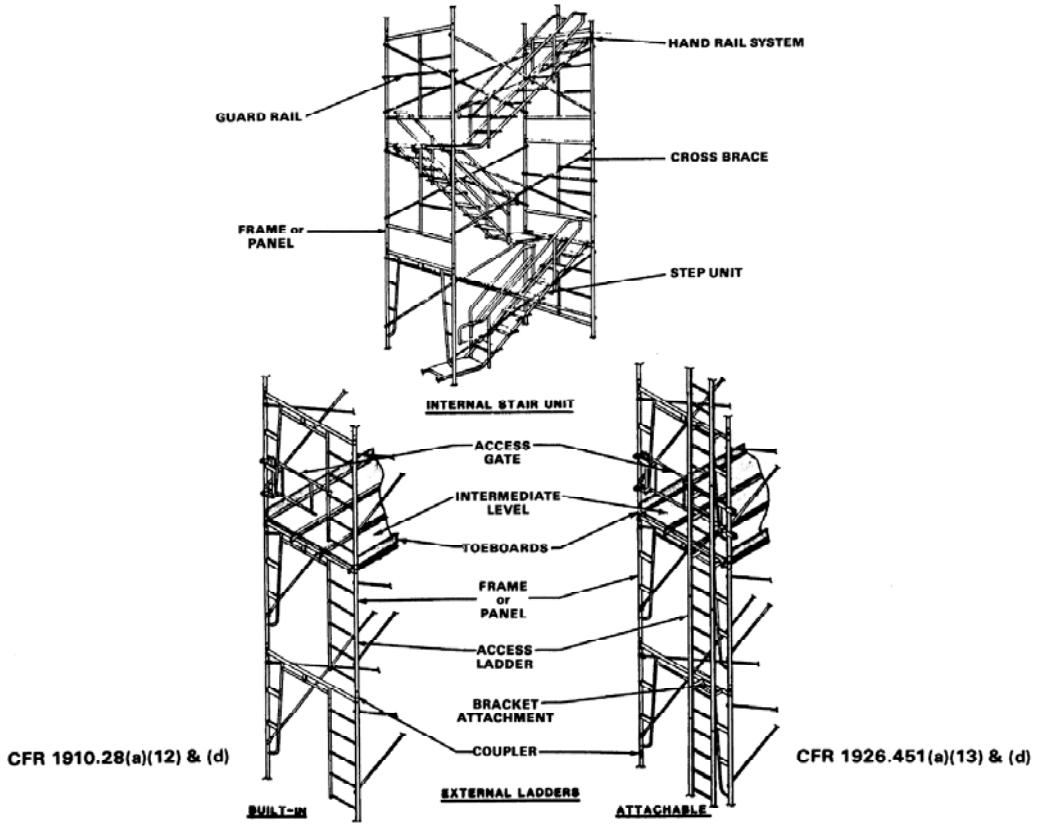

**System Scaffold**

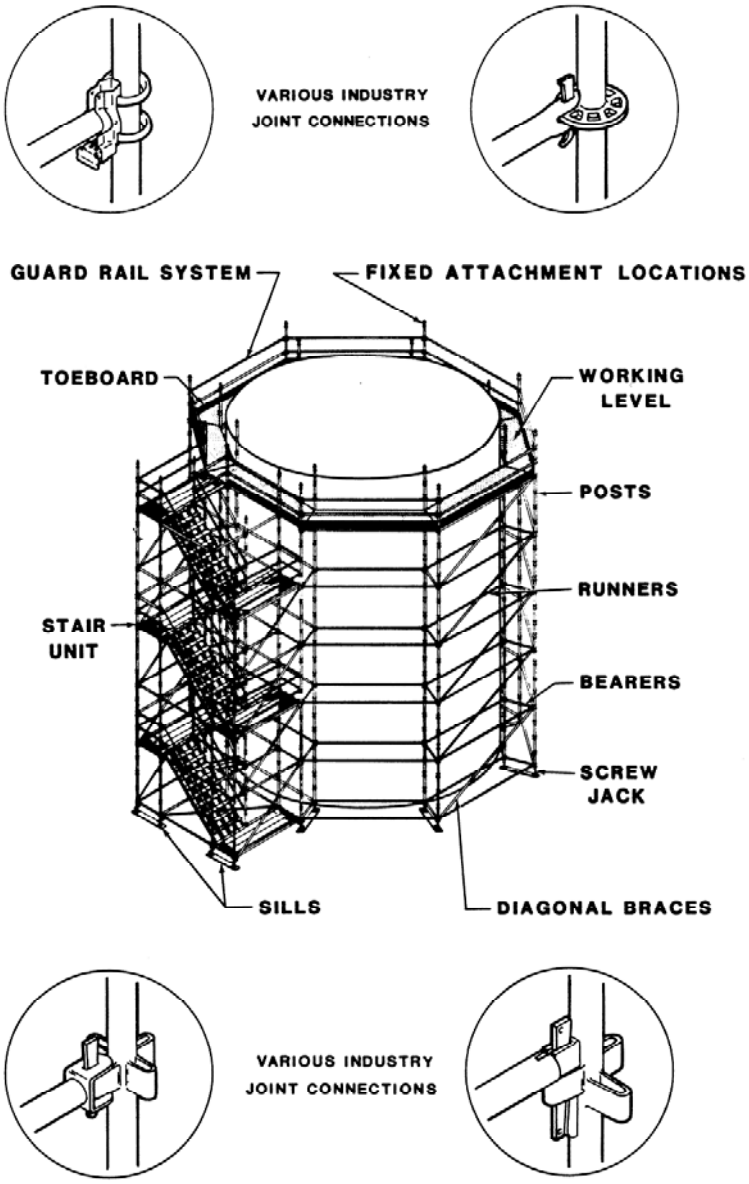

**Tube and Coupler Scaffold**

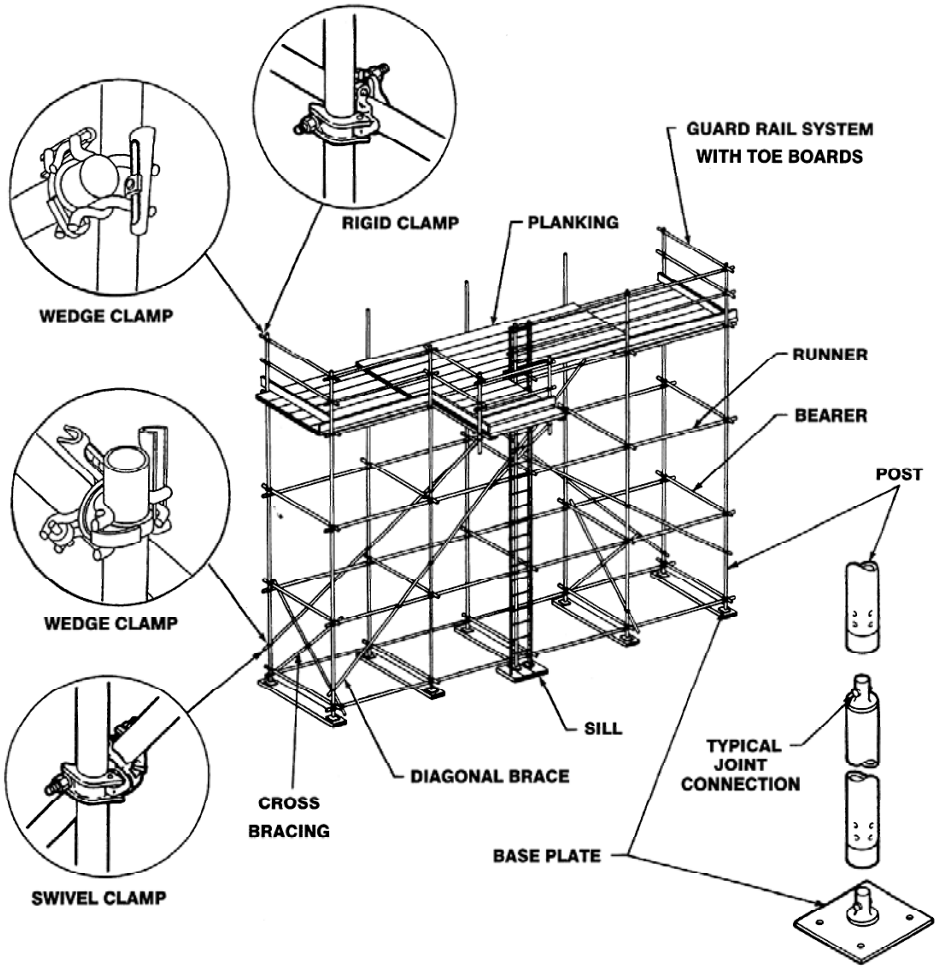

**Two-Point Suspended Scaffold**

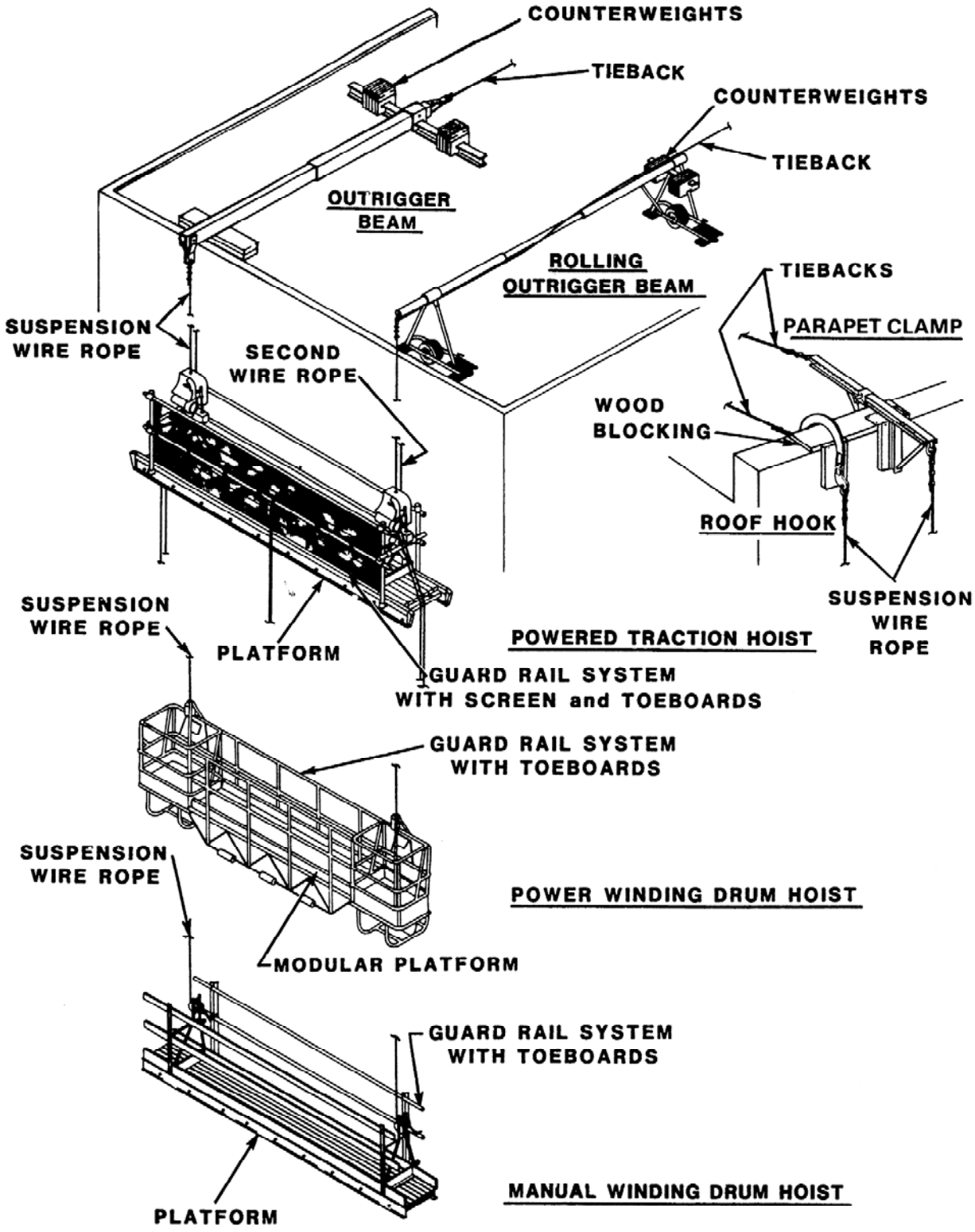


CFR 1910.28(g) CFR 1926.451(i)

**Two-Point Suspended Scaffold Ground Rigged Sway Control**

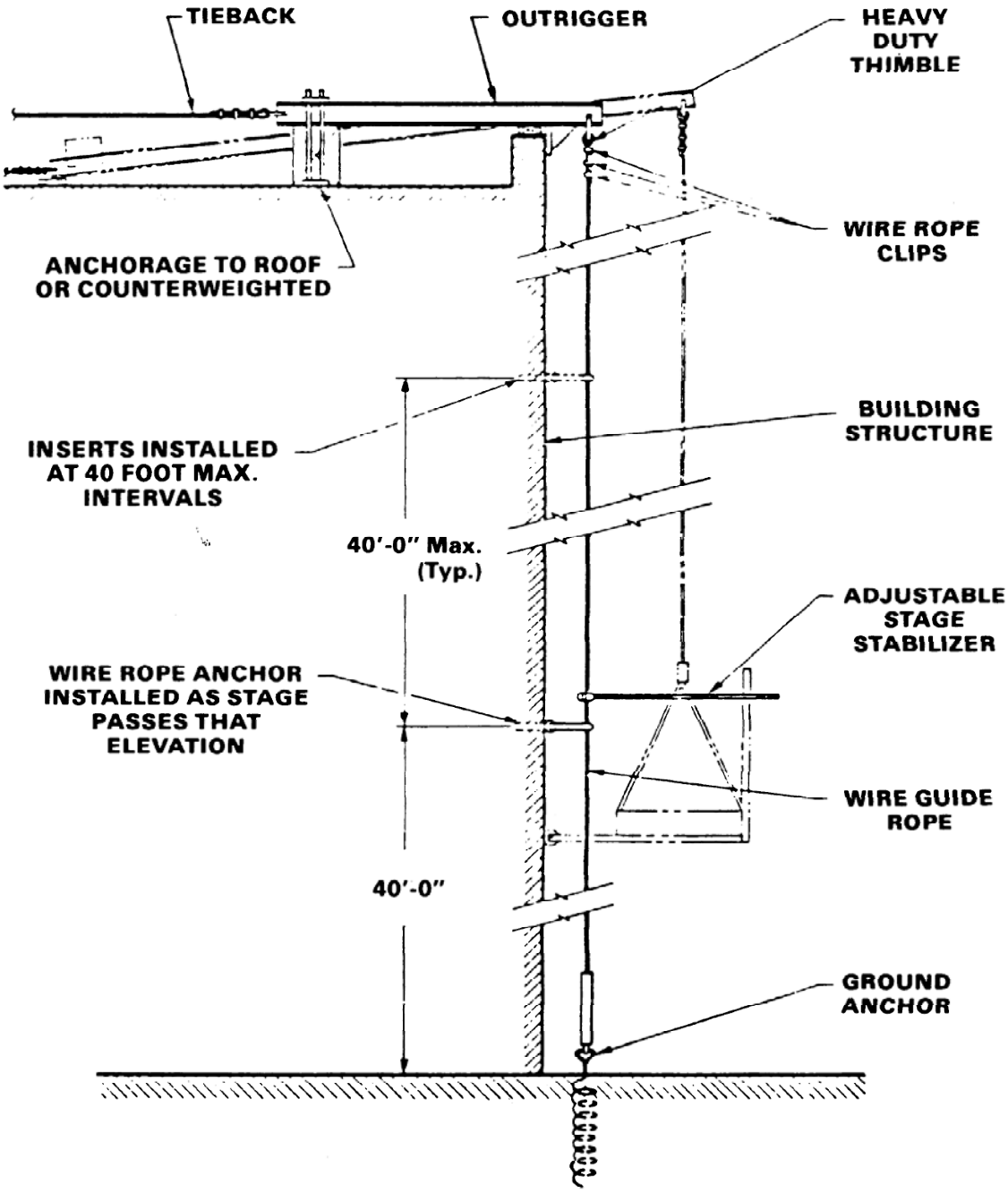


**SYSTEM MUST BE DESIGNED BY QUALIFIED PERSONNEL**

## Multi-Level Suspended Scaffold with Powered Hoists

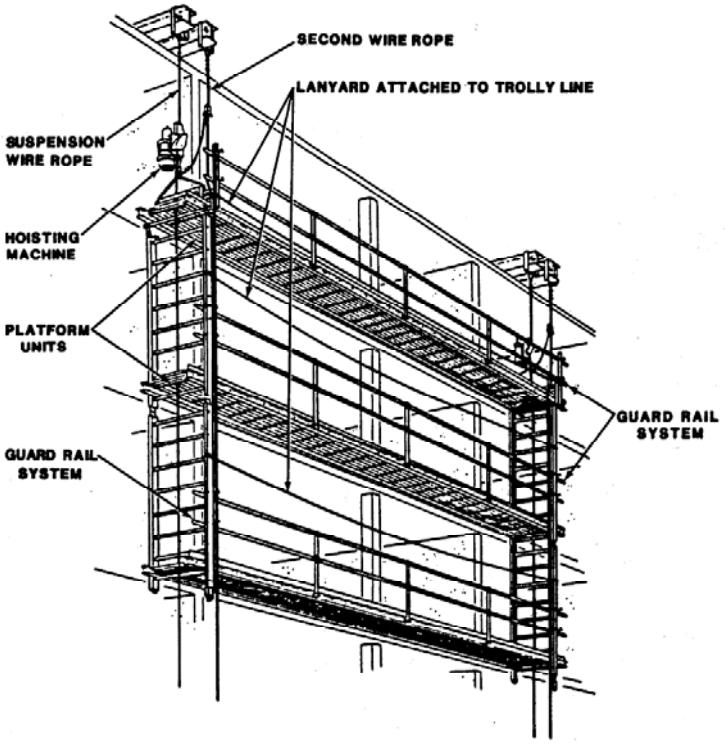


## Multi-Point Suspended Scaffold

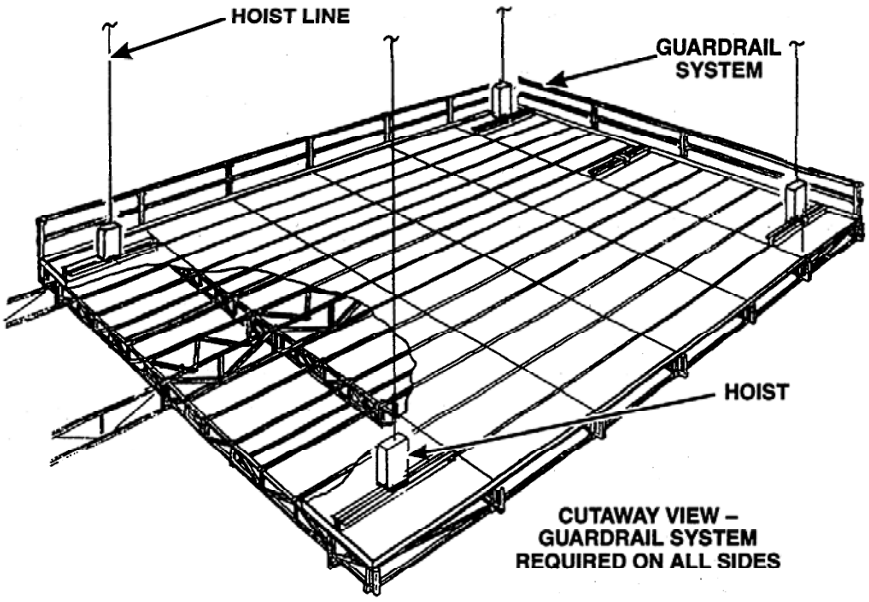

**Suspended Platform Welding Precautions**

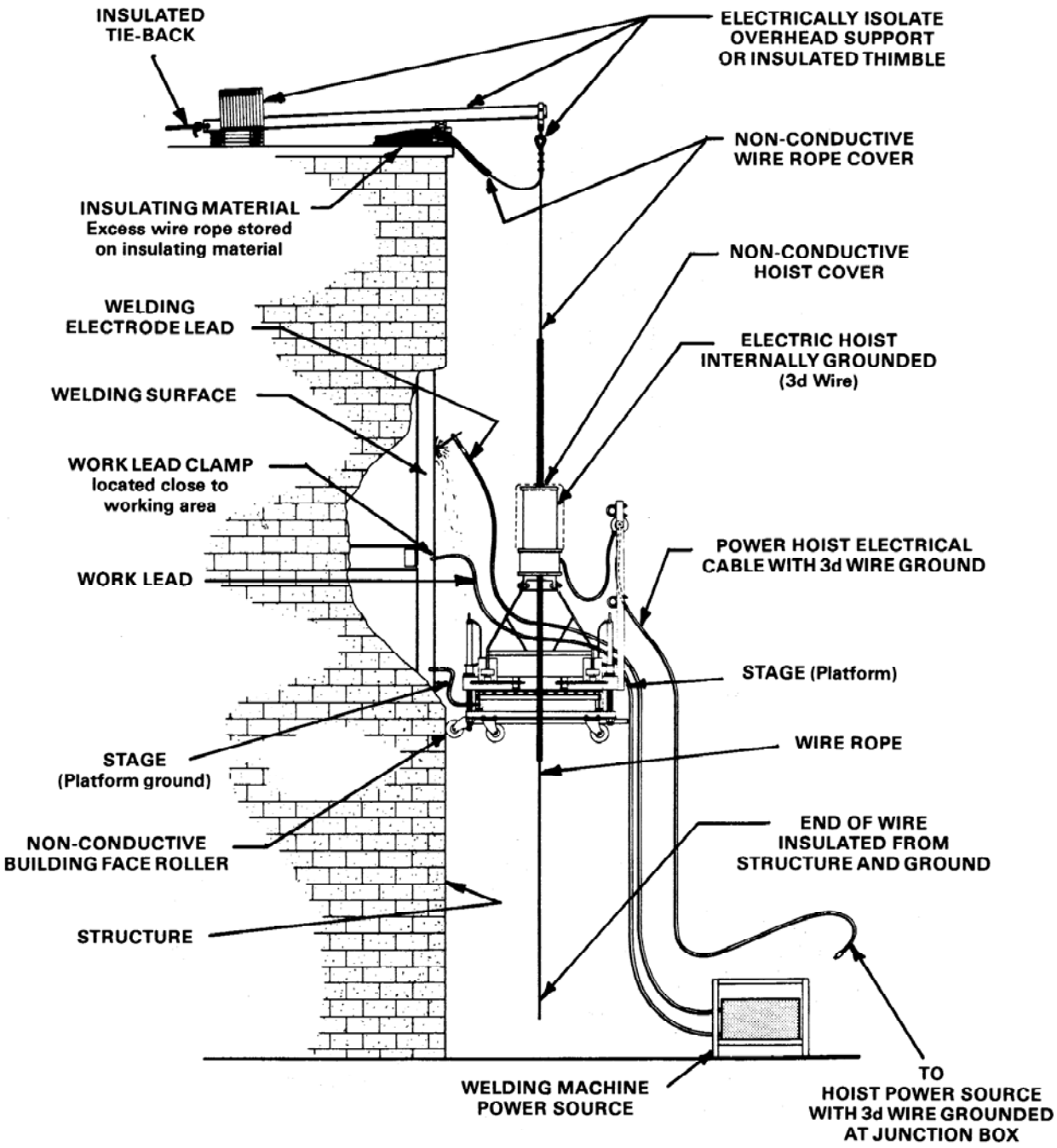

## Stone Setters' Adjustable Multi-Point Suspended Scaffold with Manual Winding Drum Hoists

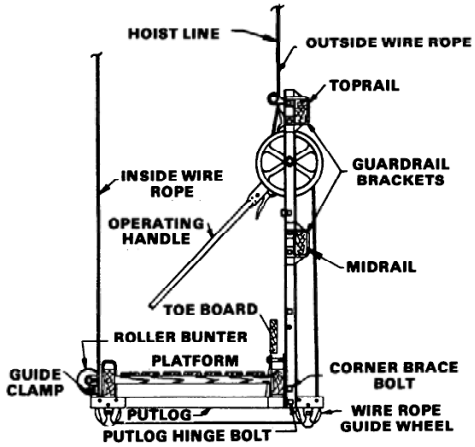


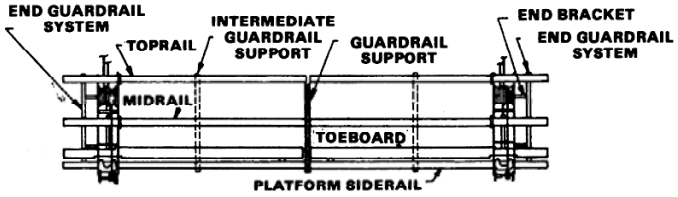


CFR 1910.28(h)

CFR 1926.451(j)

## Work Cages

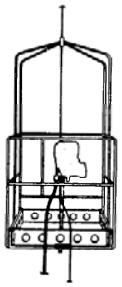

POWER TRACTION HOIST WORK CAGE

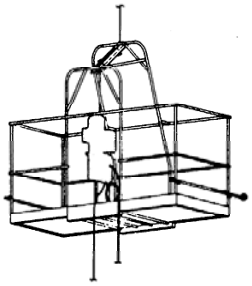

POWER TRACTION HOIST WORK CAGE WITH EXTENSIONS

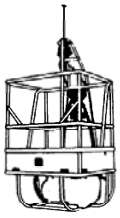

SINGLE POINT SUSPENSION SCAFFOLD WINDING DRUM HOIST

CFR 1910.28(i)

CFR 1926.451(k)

## Masons' Adjustable Multi-Point Suspension Scaffold with Winding Drum Hoists

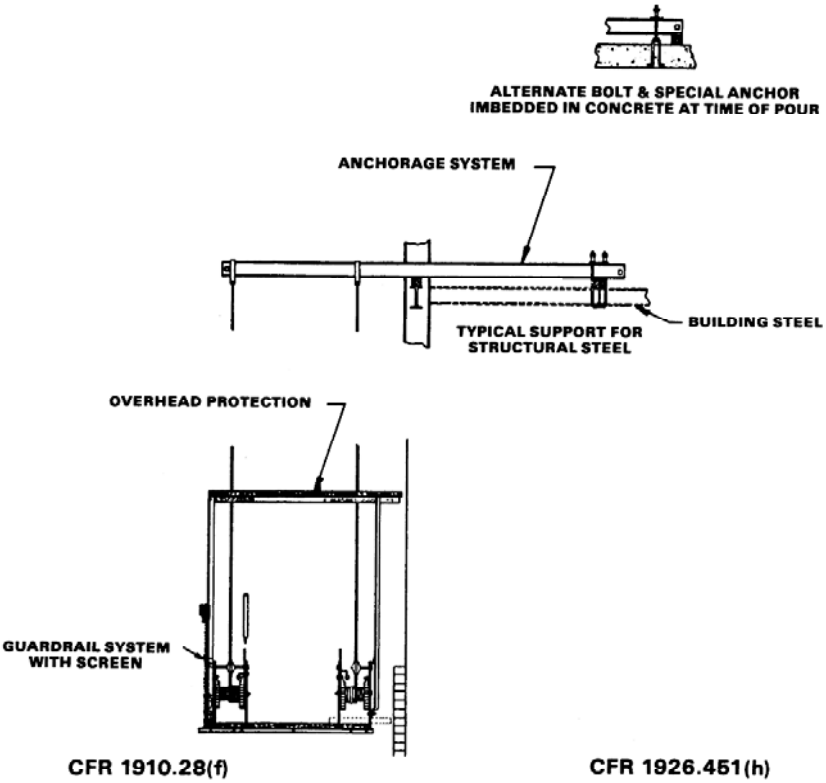


## Boatswain's Chair

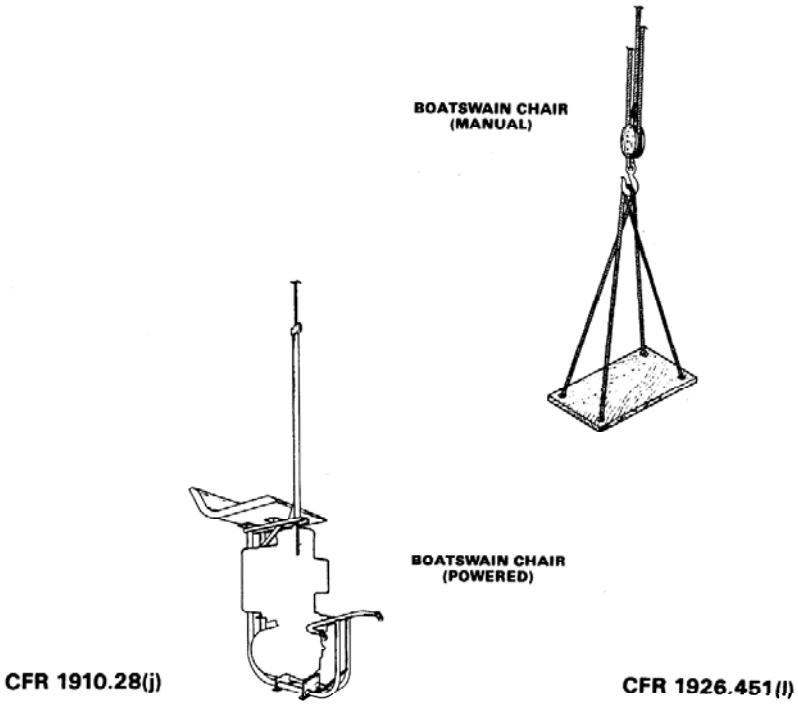

## Interior Hung Scaffold

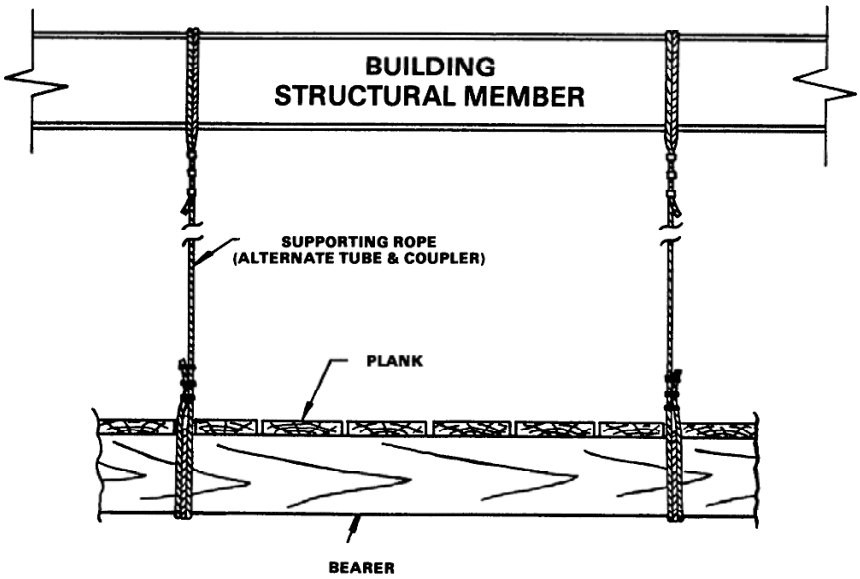


CFR 1910.28(p) CFR 1926.451(r)

## Catenary Scaffold

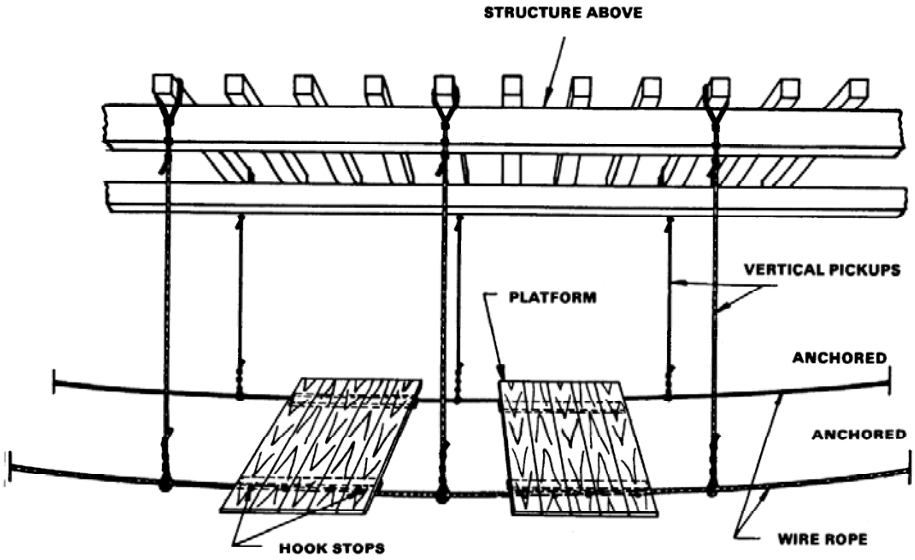

## Needle Beam Scaffold Structural Member Above

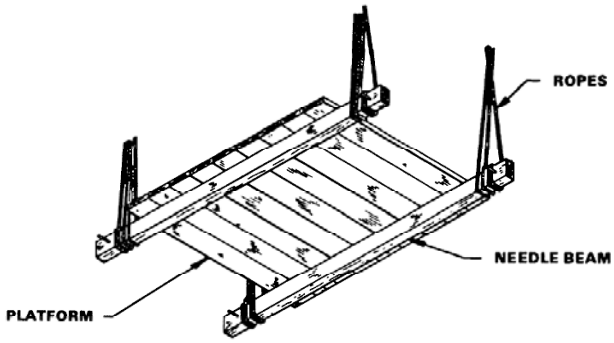


CFR 1910.28(n) CFR 1926.451(p)

## Float Scaffold

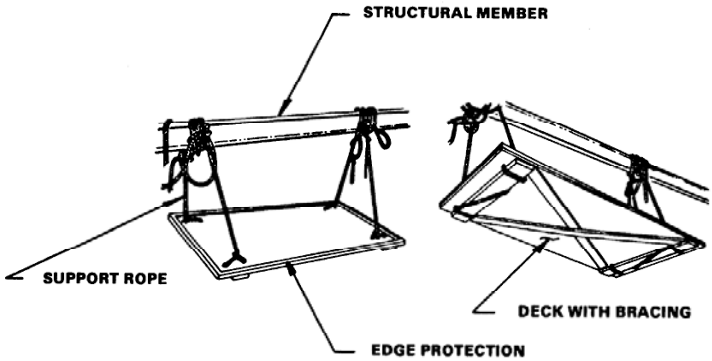


CFR 1910.28(u) CFR 1926.451(w)

## Window Jack Scaffold

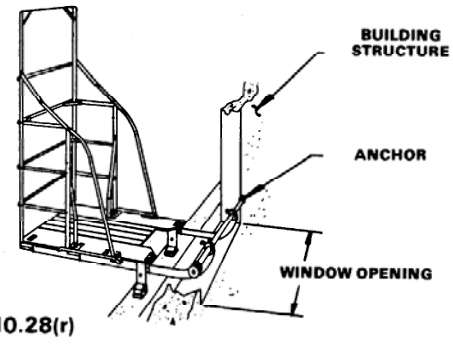


CFR 1910.28(r) CFR 1926.451(t)

## Metal Carpenter Bracket

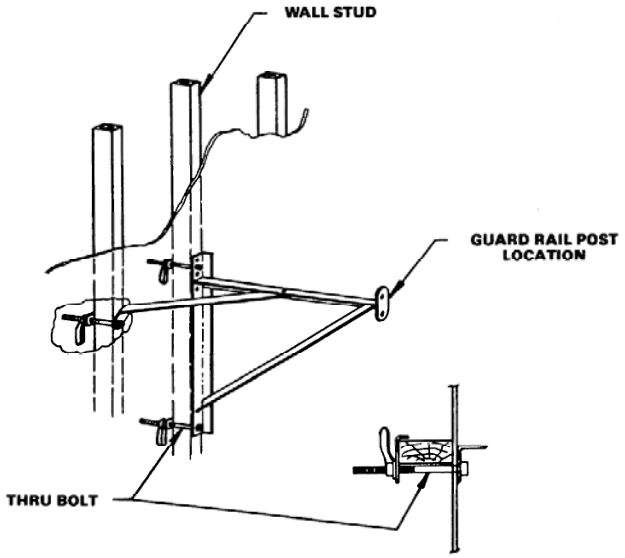


CFR 1910.28(k)

CFR 1926.451(m)

## Pump Jack Scaffold

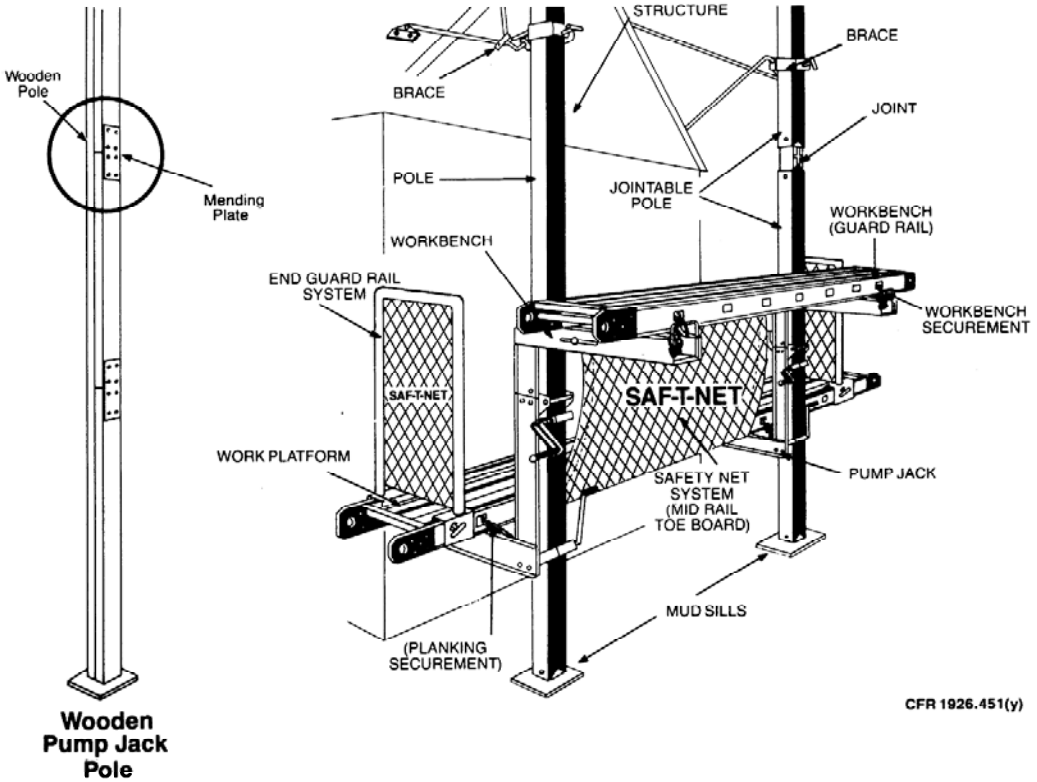

**Adjustable Scaffolds**

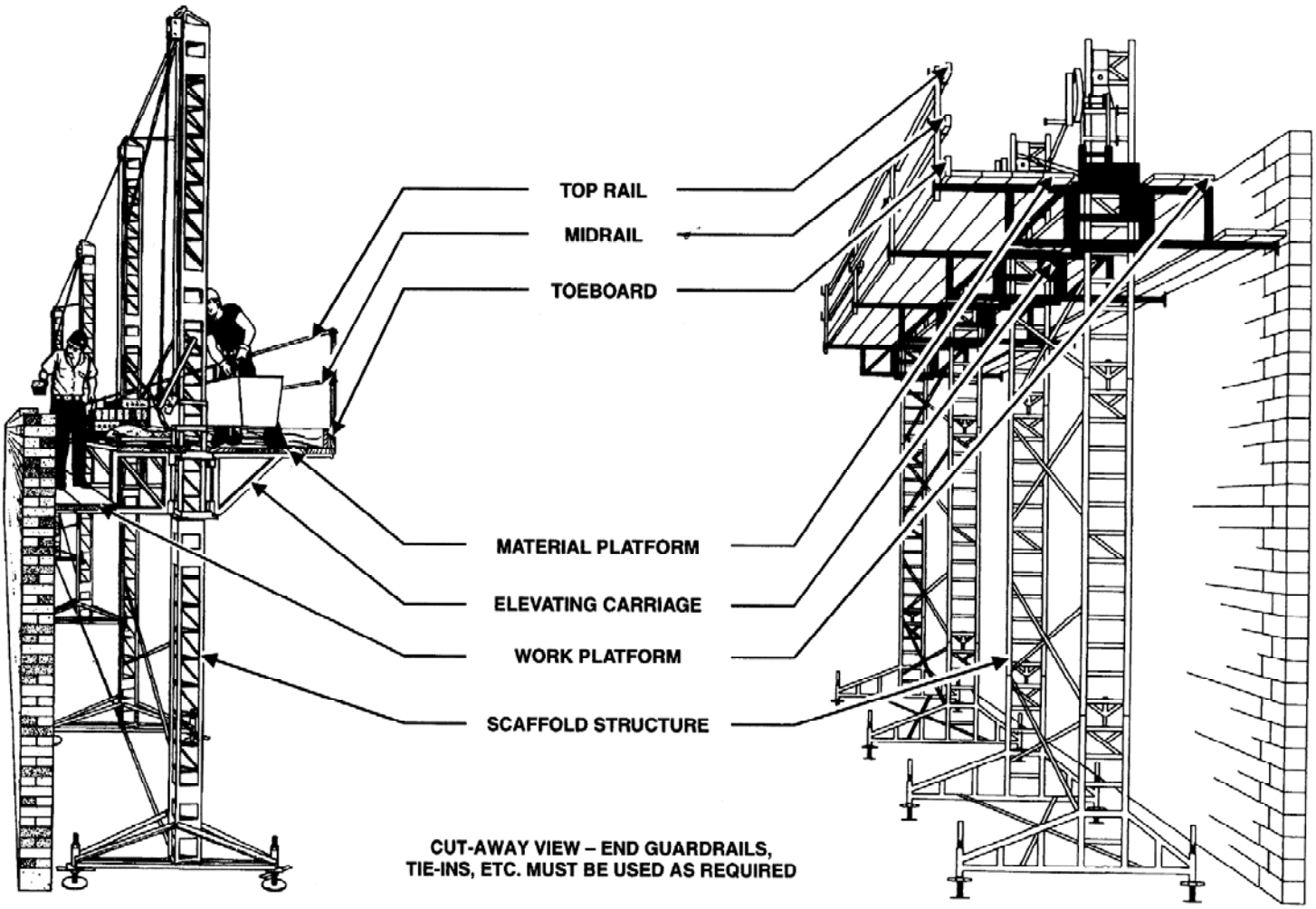

**Horse Scaffold**

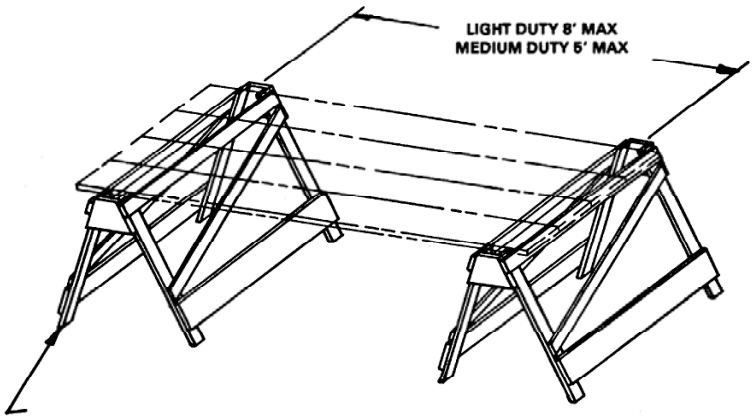


SEE APPROPRIATE OSHA STANDARDS TABLES FOR MEMBER SIZES & PLANK SIZES

CFR 1910.28(m) CFR 1926.451(o)

**Bricklayers' Square Scaffold**

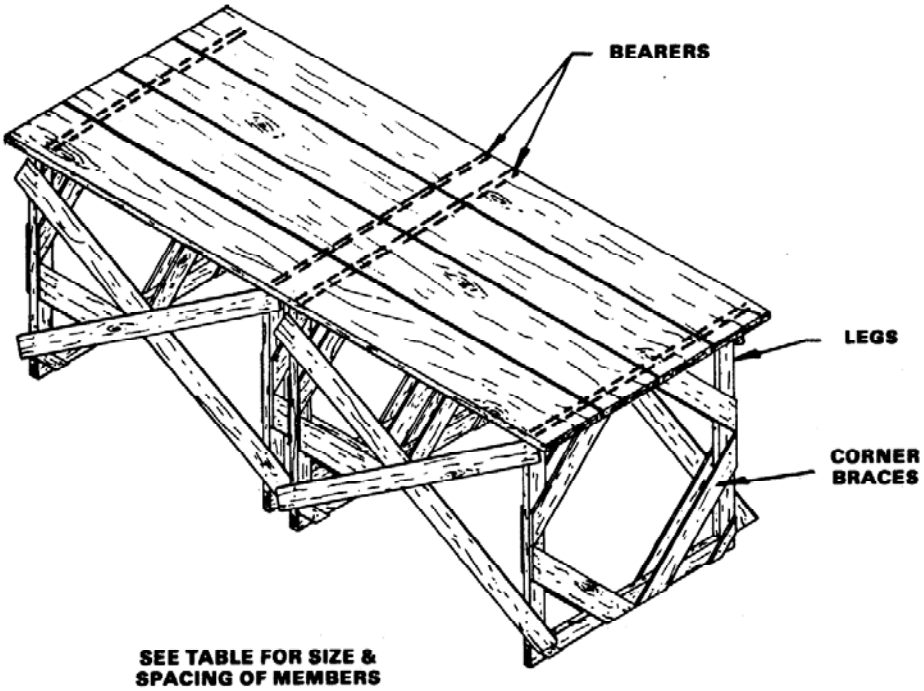


SEE TABLE FOR SIZE & SPACING OF MEMBERS

CFR 1926.451(n)

**Ladder Jack Scaffold**

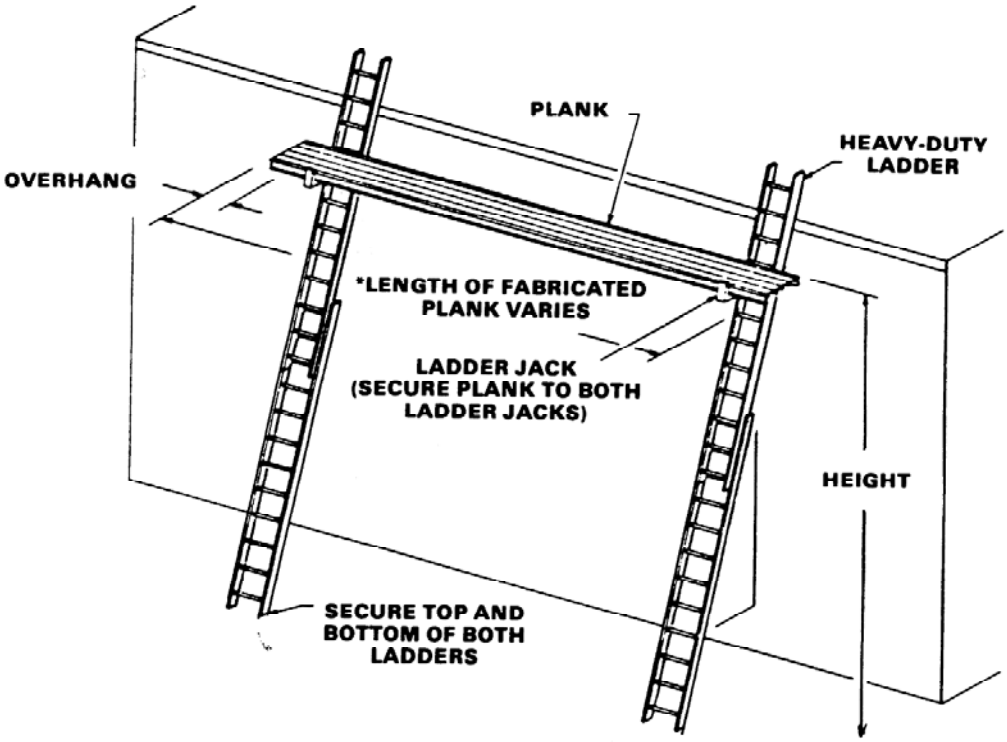


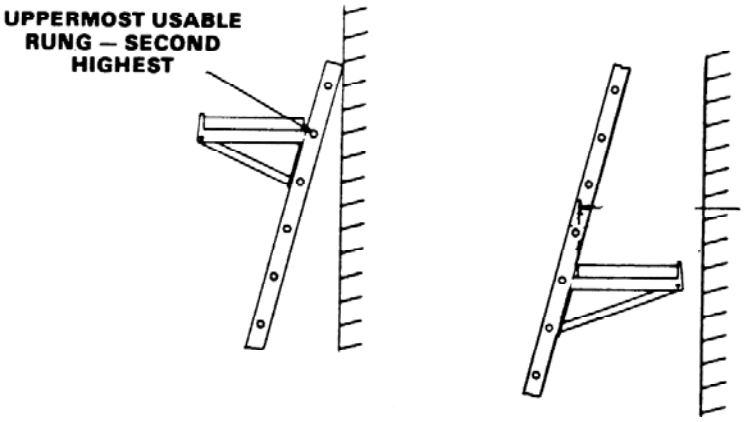


JACK INSTALLED ON SIDE OF LADDER AWAY FROM SURFACE

JACK INSTALLED ON SIDE OF LADDER TOWARD SURFACE

***See OSHA requirements regarding width, height, spans and types of ladders.**

CFR 1910.28(q)

CFR 1926.451(s)

**Extension Trestle Ladder Supported Scaffold**

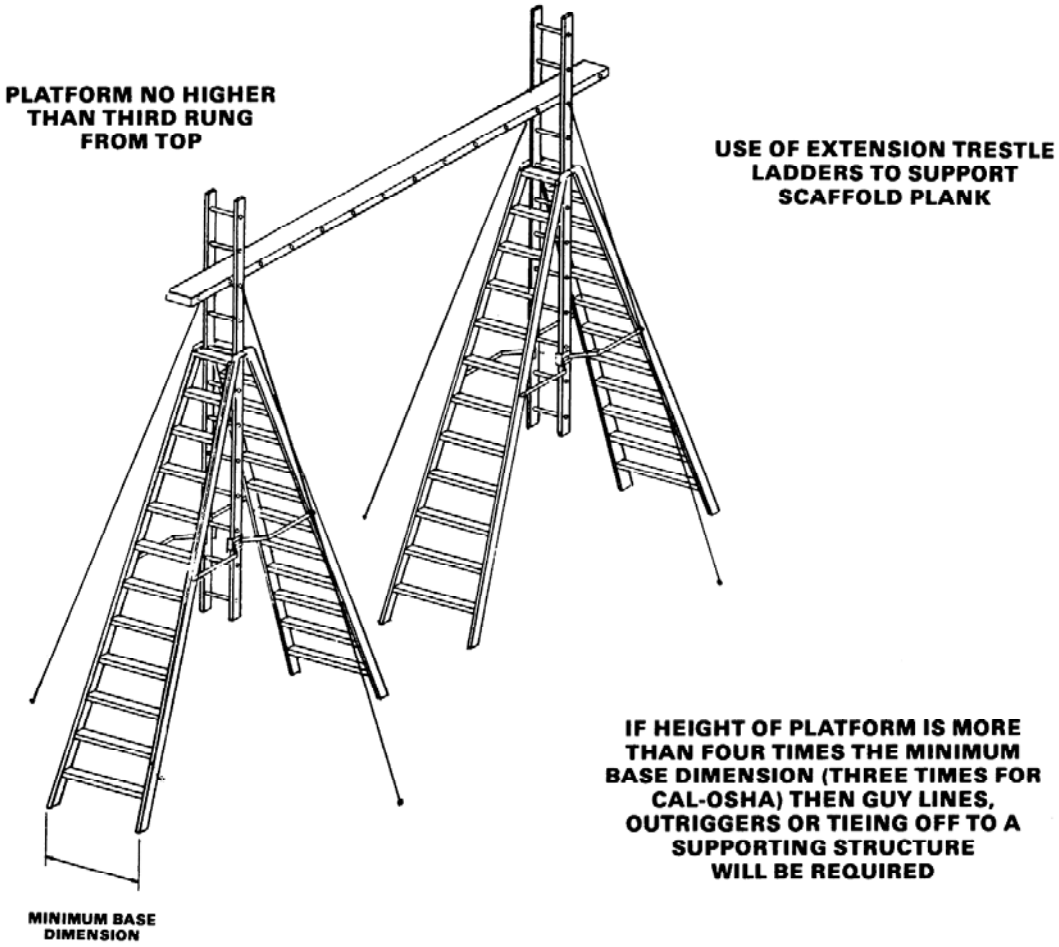


**Free Standing Ladder Supported Scaffold**

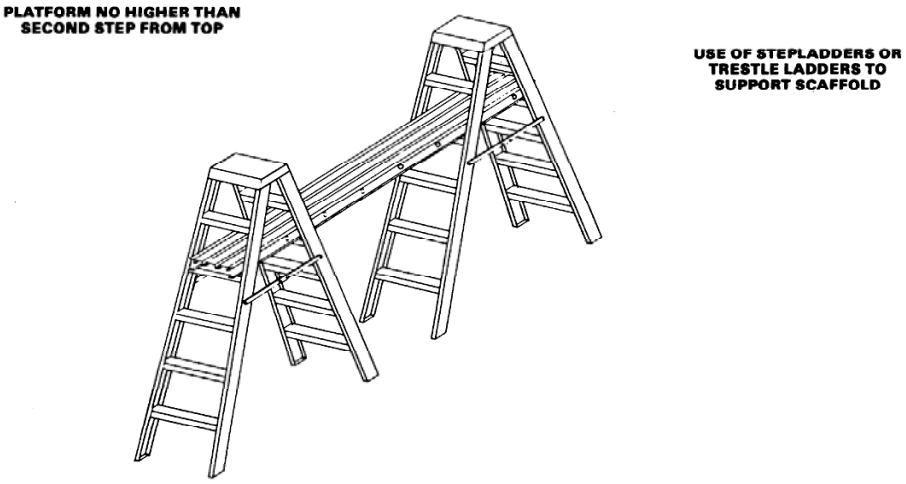

**Typical Examples of Vehicle Mounted Elevating and Rotating Aerial Devices Covered in ANSI/SIA A92.2 Standard**

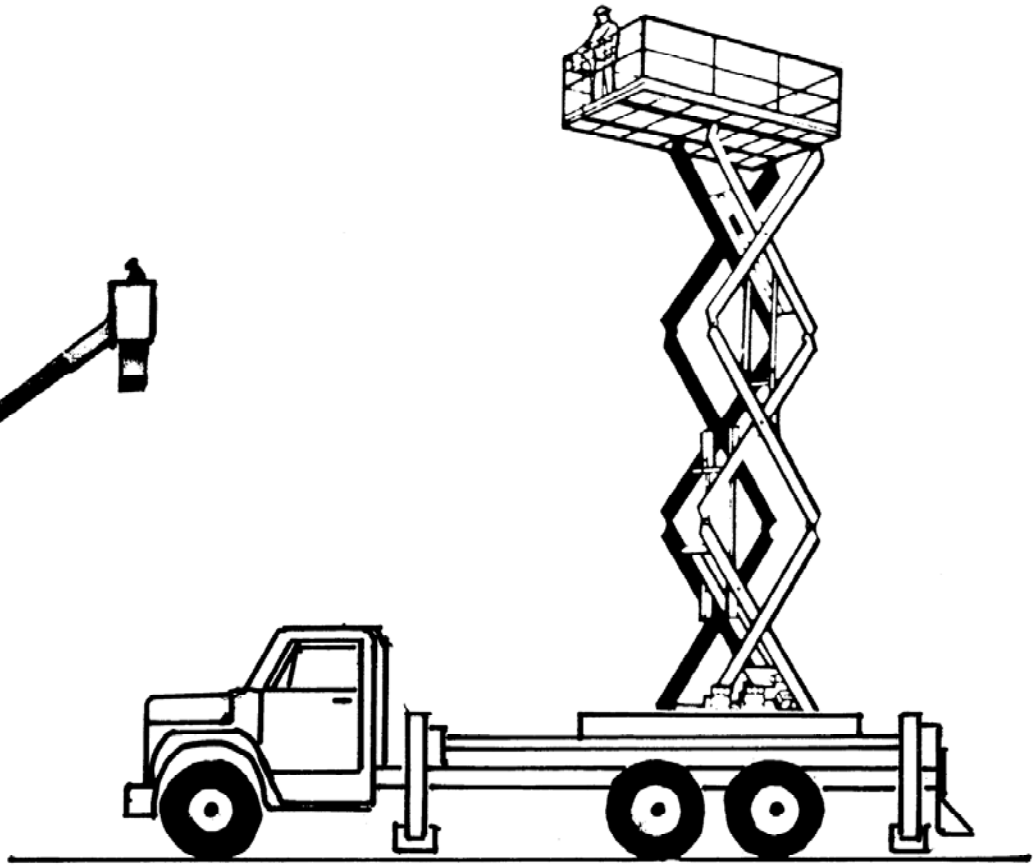

**Vehicle-Mounted Aerial Platform (Scissor Type)**

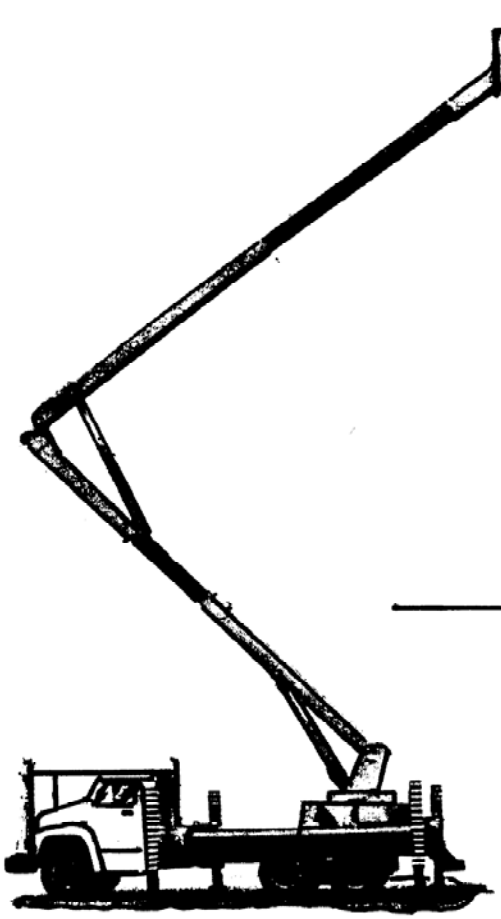

**Vehicle-Mounted Aerial Platform with Telescoping and Rotating Boom**

**Typical Examples of Manually Propelled Elevating Aerial Platforms Covered in ANSI/SIA A92.3 Standard**

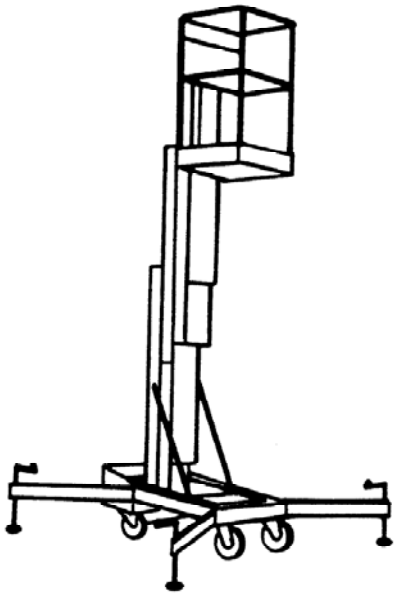

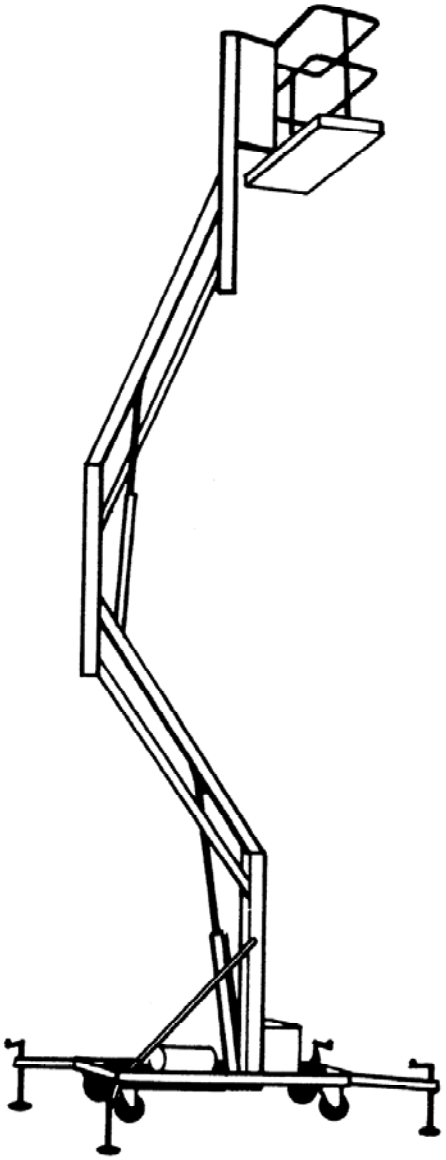

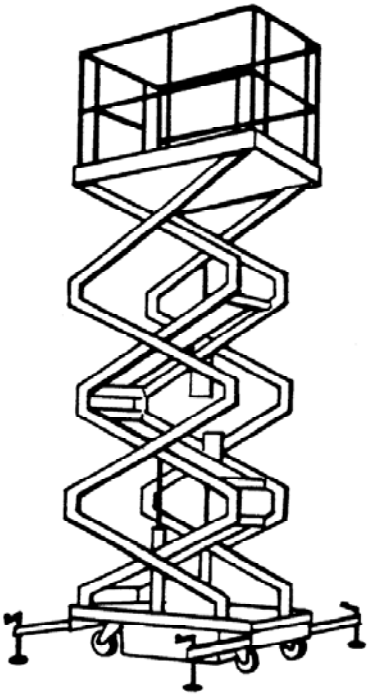

**Typical Examples of Boom-Supported Elevating Work Platforms Covered in ANSI/SIA A92.5 Standard**

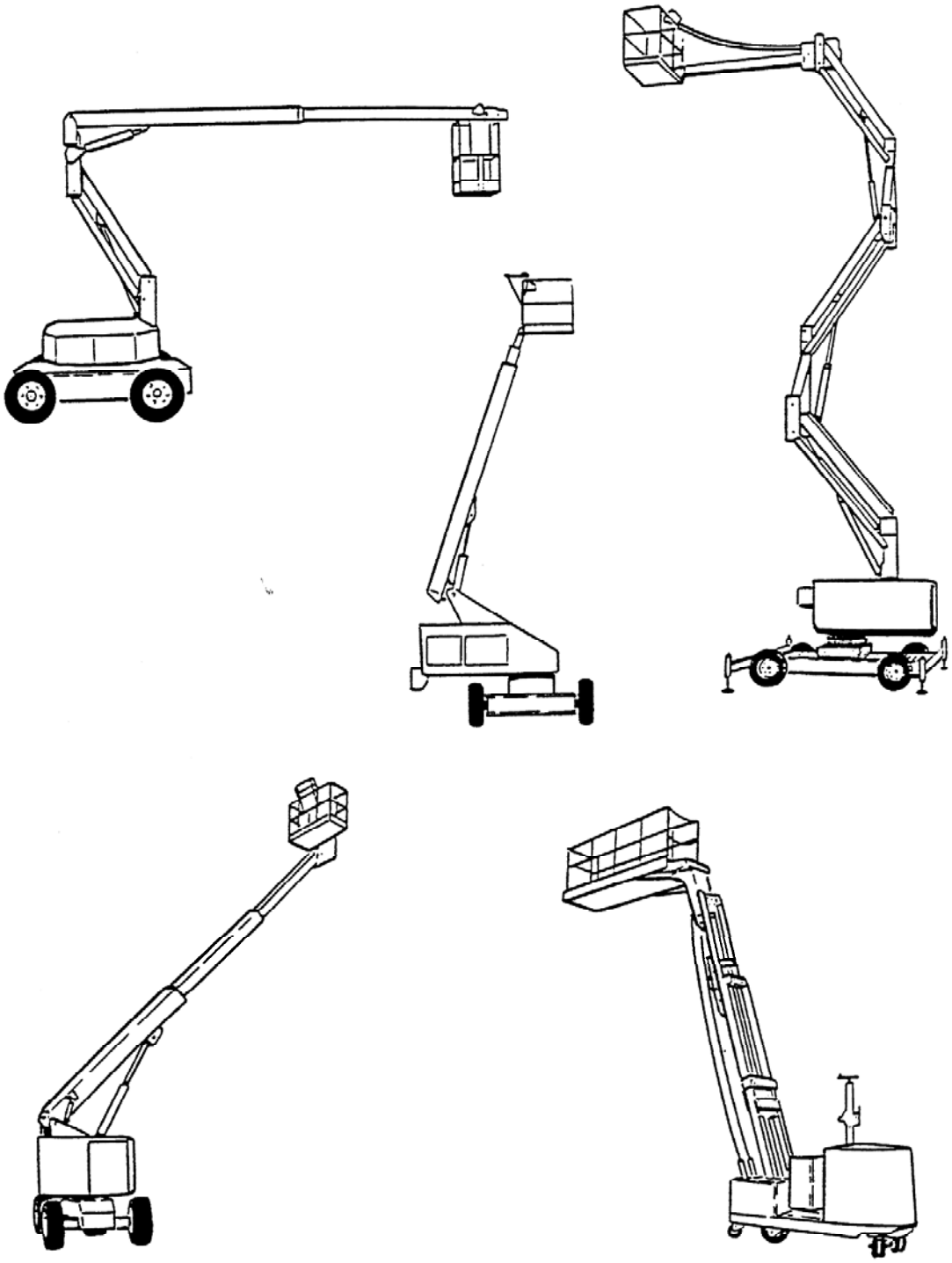

**Typical Examples of Self-Propelled Elevating Work Platforms Covered in ANSI/SIA a92.6 Standard**

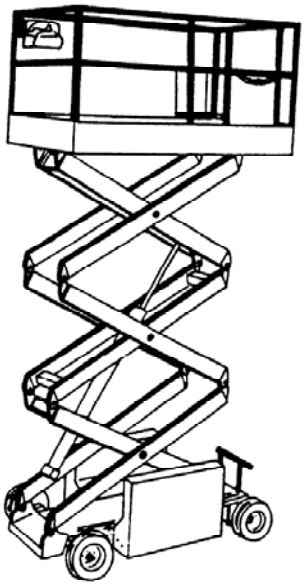

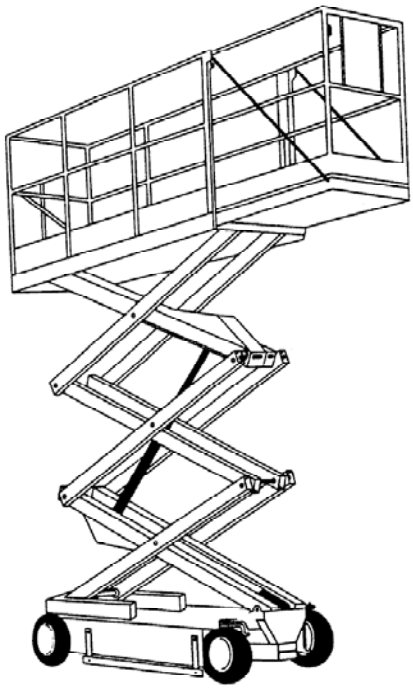

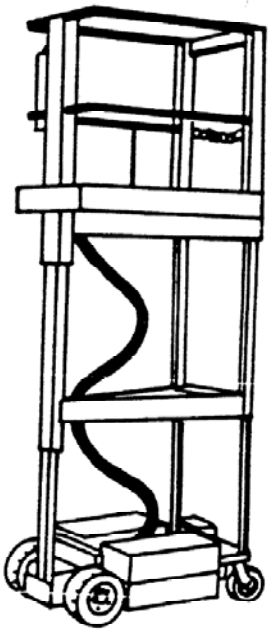

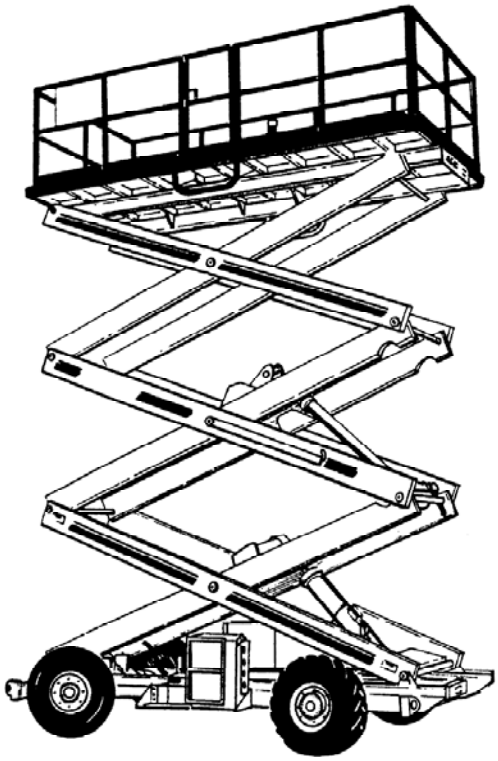

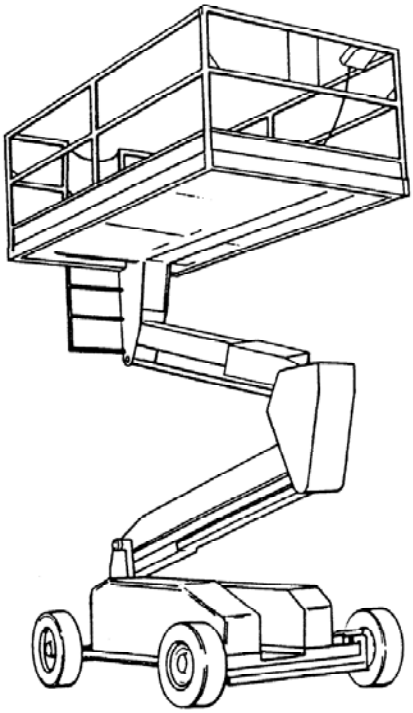

**Typical Examples of Airline Ground Support Vehicle-Mounted Vertical Lift Devices Covered in ANSI/SIA A92.7 Standard**

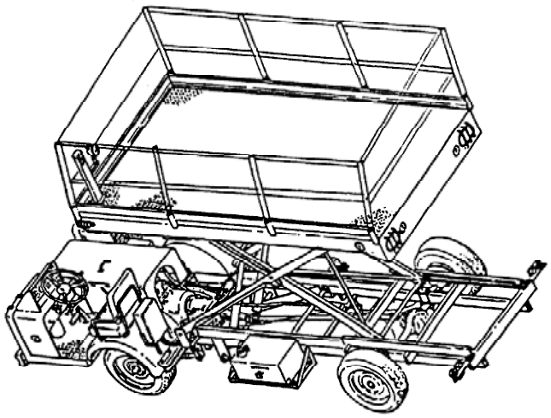

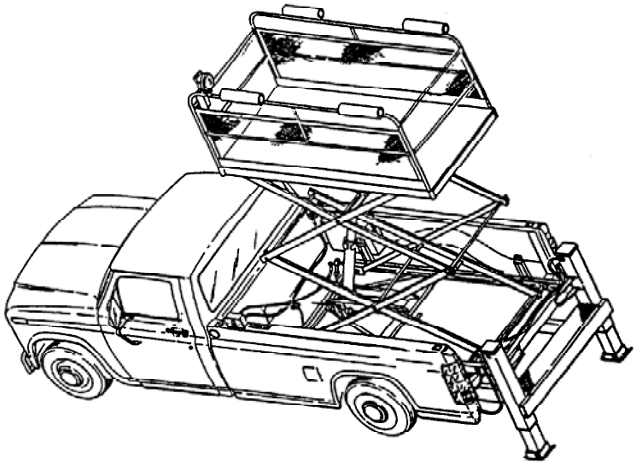

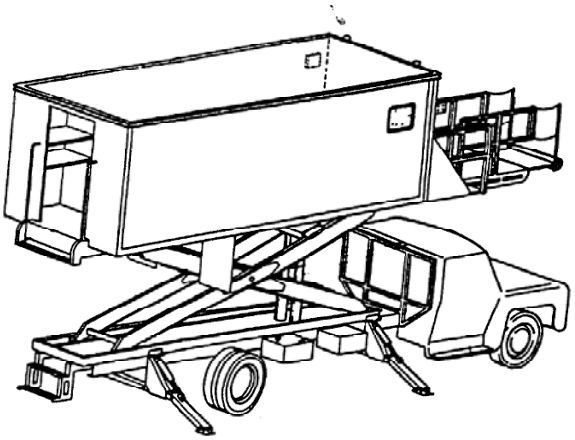

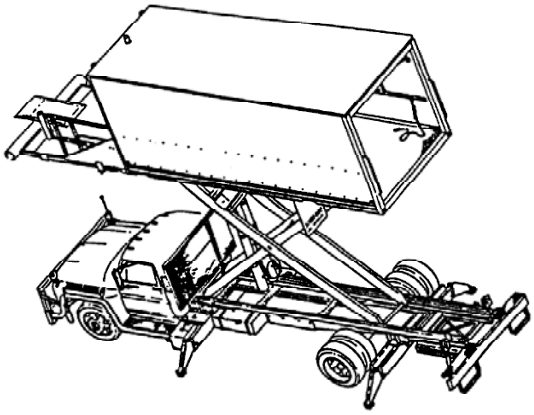

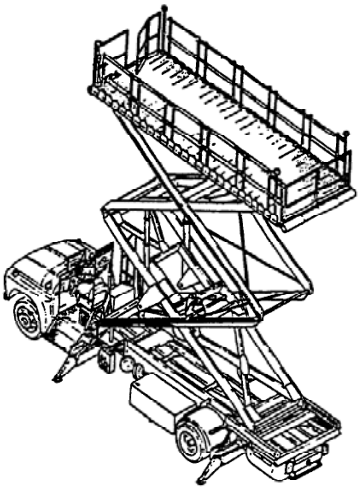

**Typical Example of Articulated Boom for Vehicle-Mounted Bridge Inspection and Maintenance Devices Covered in ANSI/SIA A92.8 Standard**

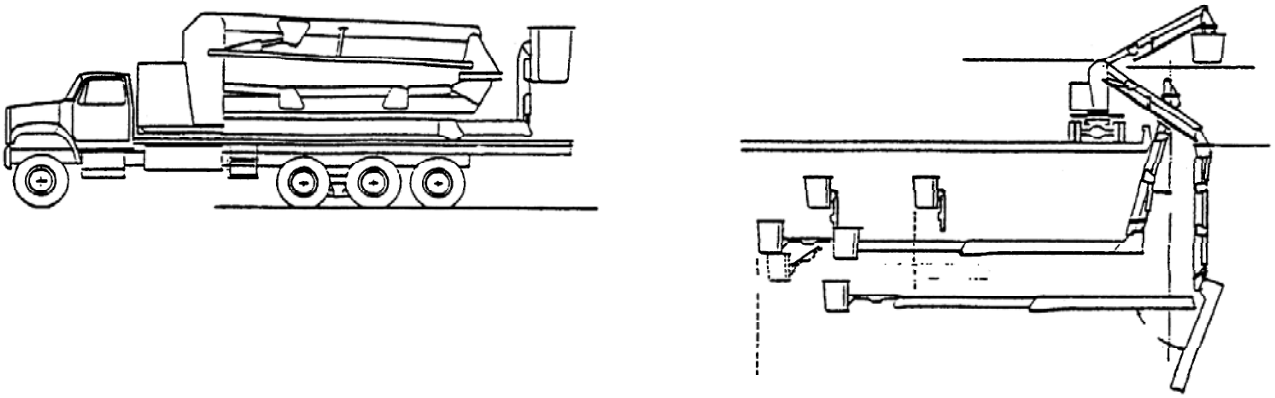

**Typical Examples of Tower-Type Construction for Vehicle-Mounted Bridge Inspection and Maintenance Devices Covered in ANSI/SIA A92.8 Standard**

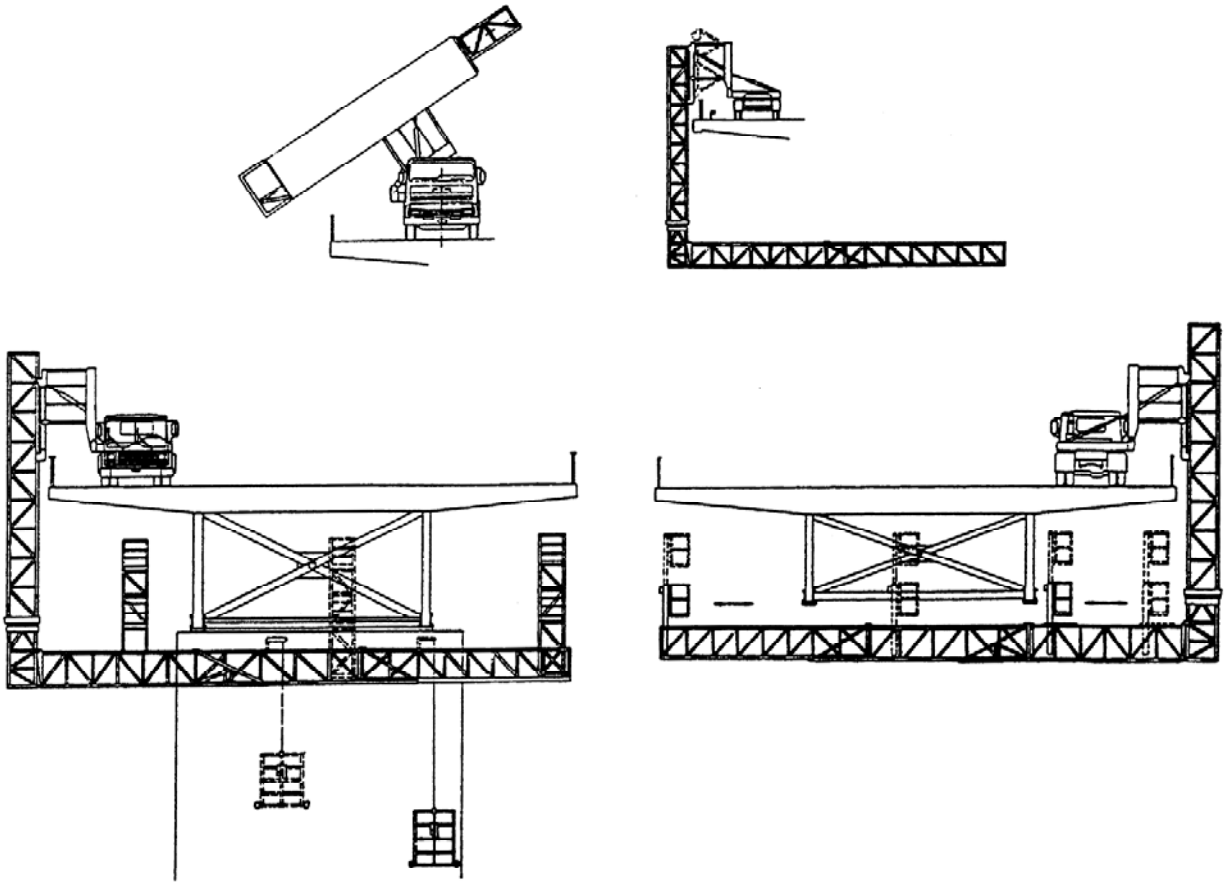
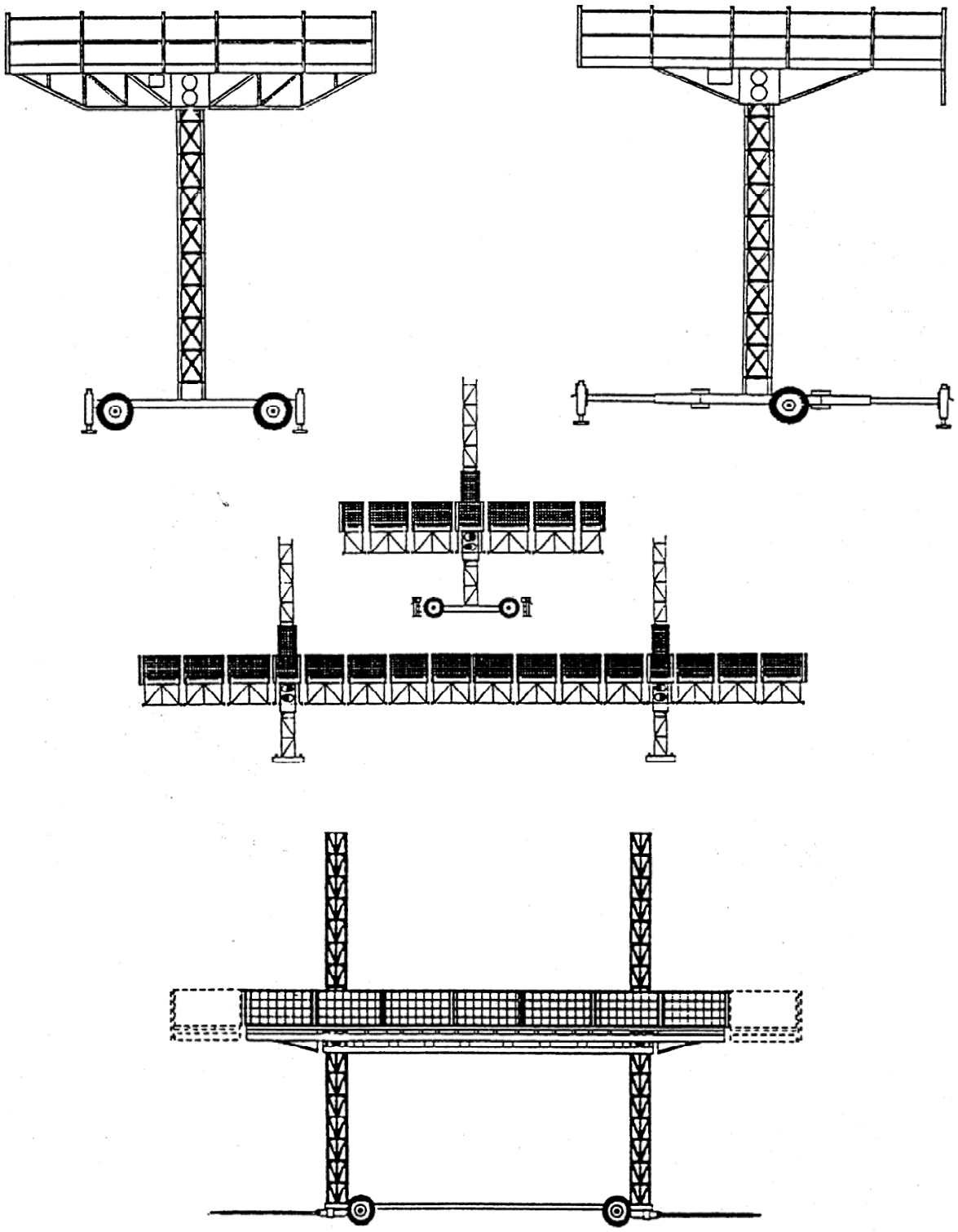
**Typical Examples of Mast-Climbing Work Platforms Covered in ANSI/SIA A92.9 Standard**